Manual

Circuit principle:

ICL8038 pin function:
1 pin, 12 pin: sine wave adjustment side
2 pin: sine wave output
3 pin: triangular wave output
4 pin, 5 pin: frequency and duty cycle (or waveform asymmetry) adjustment
6 pin: V +, positive power supply
7 pin: frequency offset
8 pin: frequency adjustment input
9 pin: square wave output. This is an open collector output. When working, connect a load resistor from the pin to the corresponding positive supply, to obtain a TTL-compatible square wave output, the load resistor must be connected to the + 5V supply.
10 pin: timing capacitor side
11 pin: V-, negative power supply terminal connect ground. When using positive and negative power supply, 11 pin connected to the negative power supply, the output waveform is relative to 0V symmetry. When using a single positive power supply, pin 11 is grounded and the output waveform is unipolar and the uniform voltage is + VCC / 2.
13 pin, 14 pin: empty pin

The frequency range is 10KHz-450KHz, divided into 5 bands, with switch J2 (short-circuit cap) to switch, PR1 is the frequency adjustment, RP2 is the square wave duty cycle adjustment, RP3 is the square wave linear adjustment, RP4 is the sine wave distortion adjustment, RP5 is the output amplitude adjustment.
The circuit can be powered from a single 12-24V supply from J1. J4 is the waveform output, 1 pin output with DC bias signal, 2 pin output pure signal, the output waveform category can be switch by J3 (short-circuit cap).

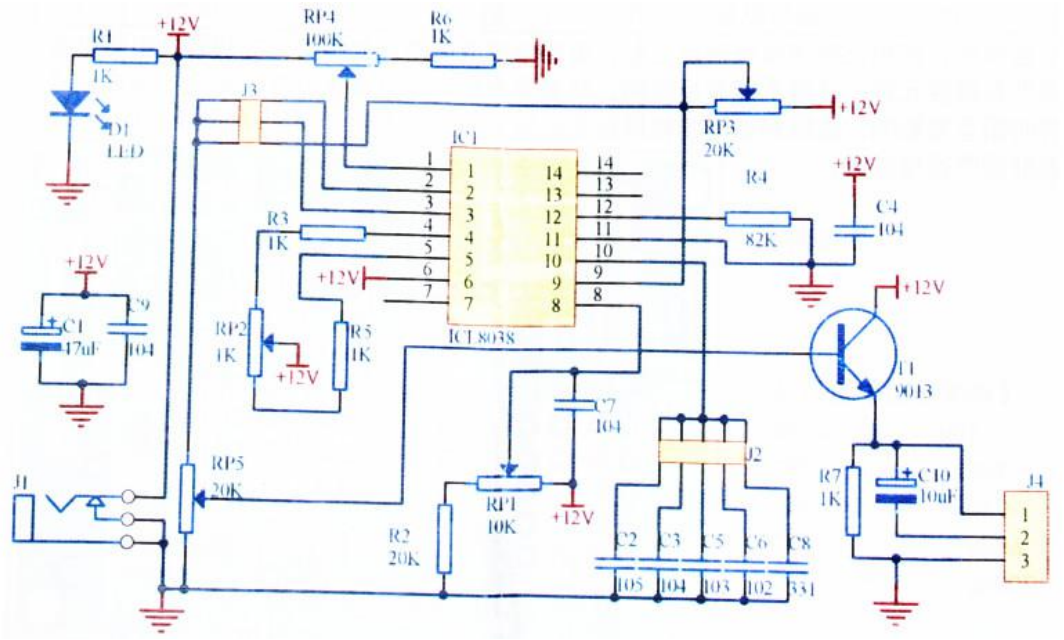

Package list:

Mark	Name	Spe.	Quantity	Mark	Name	Spe.	Quantity
R1,R3,R5, R6,R7	Color ring resistance	1K	5	D1	LED	3mm RED	1
R2	Color ring resistance	20K	1	C1	Electrolytic capacitor	47uF	1
R4	Color ring resistance	82K	1	J1	Power outlet	DC005	1
RP1	Adjustable resistance	10K	1	C10	Electrolytic capacitor	10uF	1
RP2	Adjustable resistance	1K	1	T1	Transistor	9013	1
RP3,RP5	Adjustable resistance	20K	2	J3	Double row of needle	3P*2	1
RP4	Adjustable resistance	100K	1	J2	Double row of needle	5P*2	1
C9,C7,C4 C3	Ceramic capacitor	104	4	J4	Single row of needle	3P	1
IC1	Integrated circuit	ICL8038	1		Short circuit cap	2P	2
	IC socket	14P	1	C2	Monolithic capacitor	105	1
C5	Ceramic capacitor	103	1	C6	Ceramic capacitor	102	1
C8	Ceramic capacitor	331	1		PCB	60*40 mm	1

Installation and commissioning note:

Components parameters according to the original given values given in the selection, the circuit of integrated circuits, diodes, transistors, electrolytic capacitors are polar components, careful not to install the opposite direction.

All components should be mounted on the circuit board surface.

Each potentiometer has an influence on each other, please select the appropriate frequency band (J2 short-circuit cap) repeatedly carefully adjusted, the frequency is lower than 50Hz and higher than 200KHz is not recommended.

Circuit power supply: 12-24V
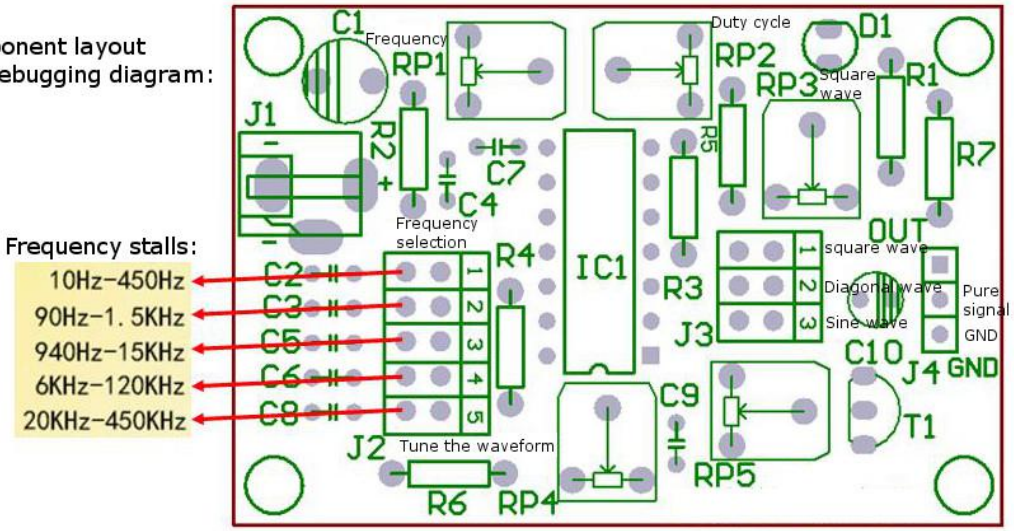
Component layout and debugging diagram: